LB120 - 1 Stage

Output End

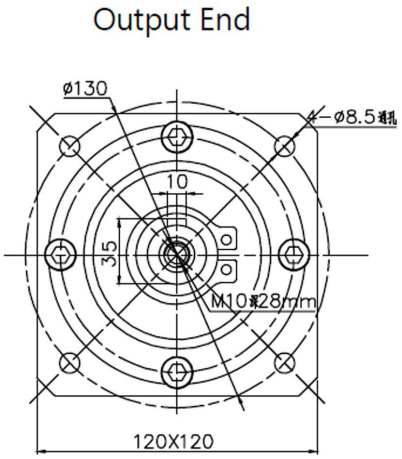

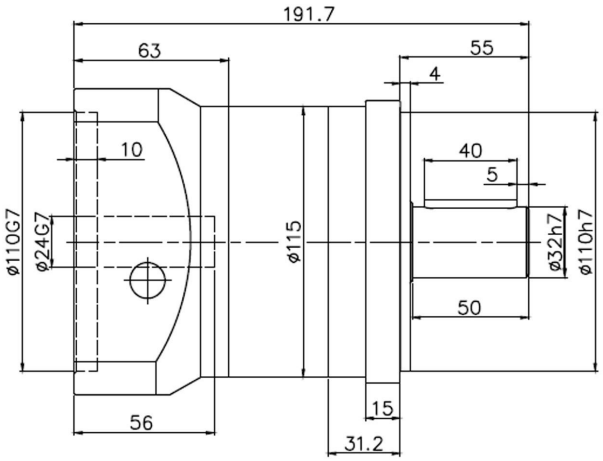

Input End

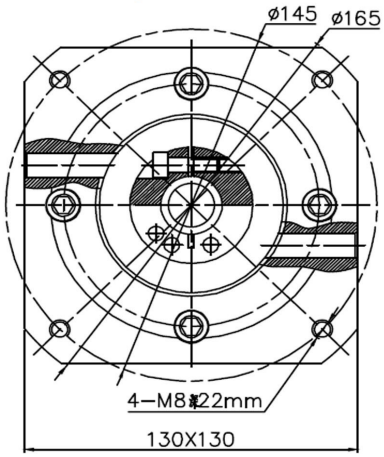

Ratio (rmp)	3	4	5	8	10
Torque N • m)	80	100	110	120	120